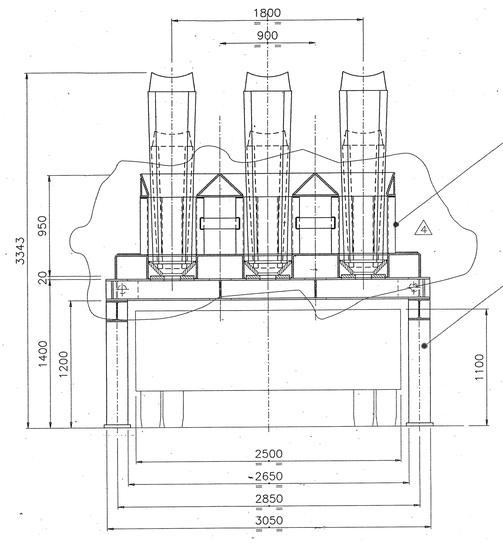

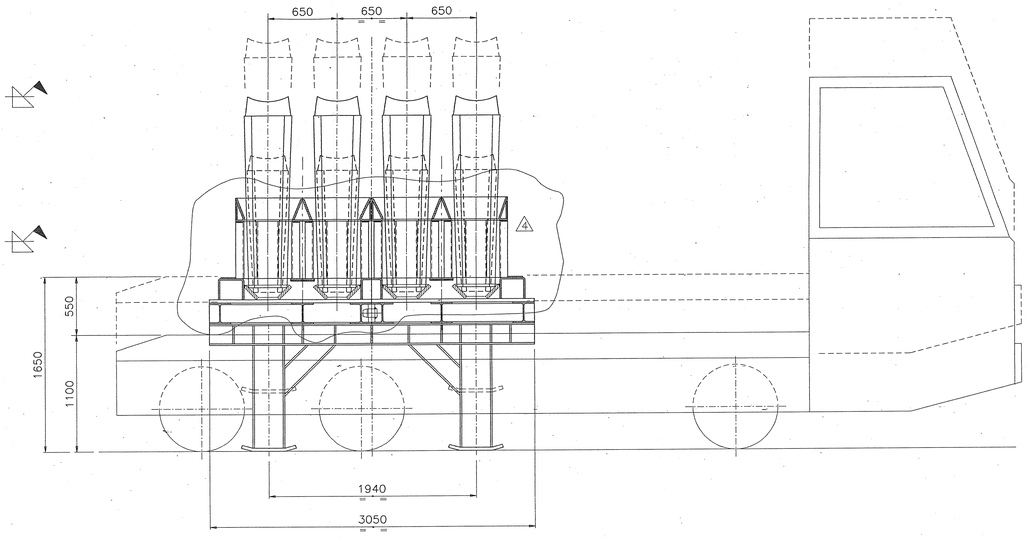

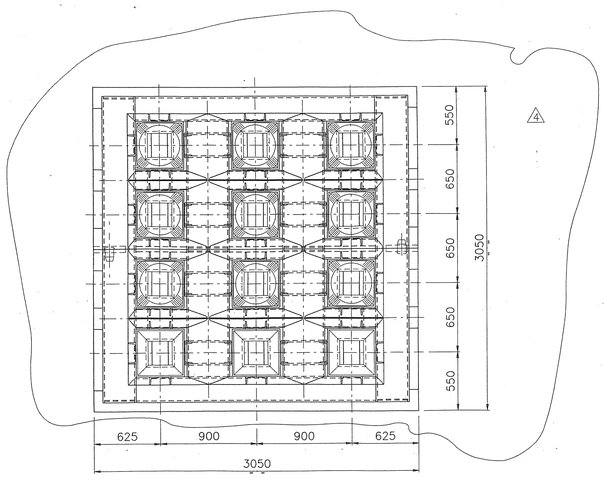

ITEM	Q.TY	EQUIPMENT/MATERIAL	MAIN TECHNICAL DATA
03M6607	10	COLD INGOT PALLET	FOR 12 INGOTS

NOTE: CIRCLED NUMBERS INDICATE ITEMS POSITION IN THE BILL OF MATERIAL

REFERENCE DRAWINGS

SD1103G00245 –INGOT CASTING BAY
0365–D21–A2025 LAYOUT
OPERATING SUB–ASSEMBLY

REV.	FILE	DATE DATA	DESCRIPTION DESCRIZIONE	Drawn Disegnato	Checked Controll.	Approved Approvato	Issue Visto
04	C M	12.03.96	REVISED WHERE INDICATED 4	SOM	MRI	ODF	RUA
03	C M	20.09.95	REVISED WHERE INDICATED 3	SOM	MRI	ODF	RUA
02	C M	30.01.95	REVISED WHERE INDICATED 2	SOM	MRI	ODF	RUA
01	C M	22.04.94	ISSUED FOR APPROVAL	SOM	PEE	ODF	BAA

REVISION - REVISIONI

MINISTRY OF MINES AND METALS

NISCO

ALLOY STEEL PROJECT

YAZD - IRAN

APPROVED:

DVAI/BOHLER
CONSULTANT ENGINEER

APPROVED: A103LC03/9

Norberga Steel & Engineering AB
S-738 21 Norberg, Sweden

DANIELI CONSORTIUM MITSUBISHI CORPORATION

CODE - CODICE: 8070346R | CLASSIFICATION - CLASSIFICAZIONE | Obtained From - Ricav. da | Replace - Sostituisce

DRAWING - DISEGNO 0365-D21-M2786 Rev. 04

TITLE - TITOLO: PLANT UNIT 03
ICA- INGOT CASTING BAY
MACHINE ASSEMBLY DRAWING
HANDLING DEVICES (NOT INSULATED)
ICA- COLAGGIO IN LINGOTTI
ASSIEME DI MACCHINA
PALLET PER LINGOTTI (NON ISOLATO)

Scale - Scala 1:20
Mass - Massa 7910
Size - Form. A0
Sheet Foglio 1
Follow Segue –

COMPUTER AIDED DESIGN
P-FREDDO.DWG

DRAWING - DISEGNO SD1103M6607001 04

COMPUTER AIDED DESIGN

REVISIONS				
ZONE	REV.	DESCRIPTION	DATE	APPROVED
	01	POS 007 Changed from U Channel to Plate	12/09/1401	Fesahat

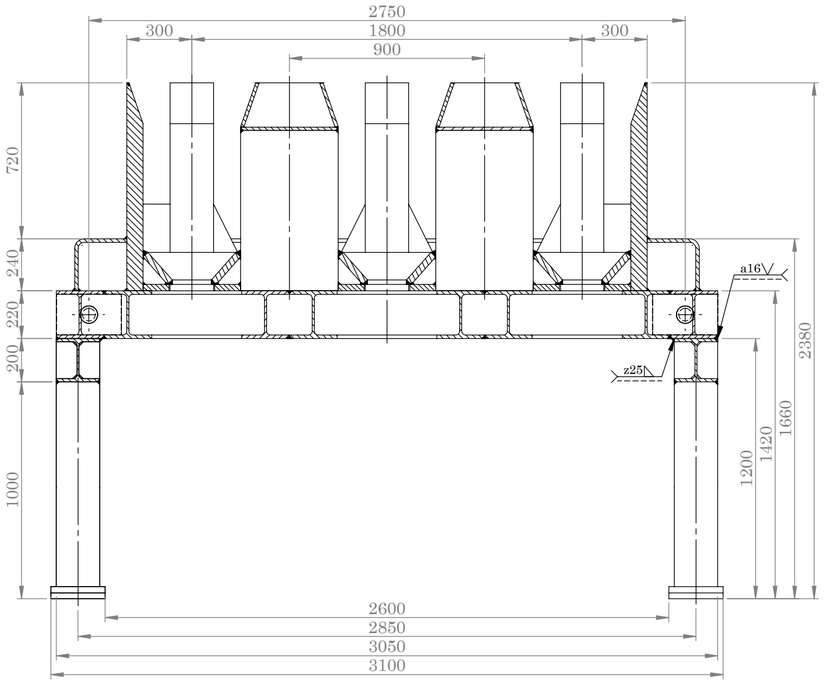

SECTION A-A
SCALE 1 : 20

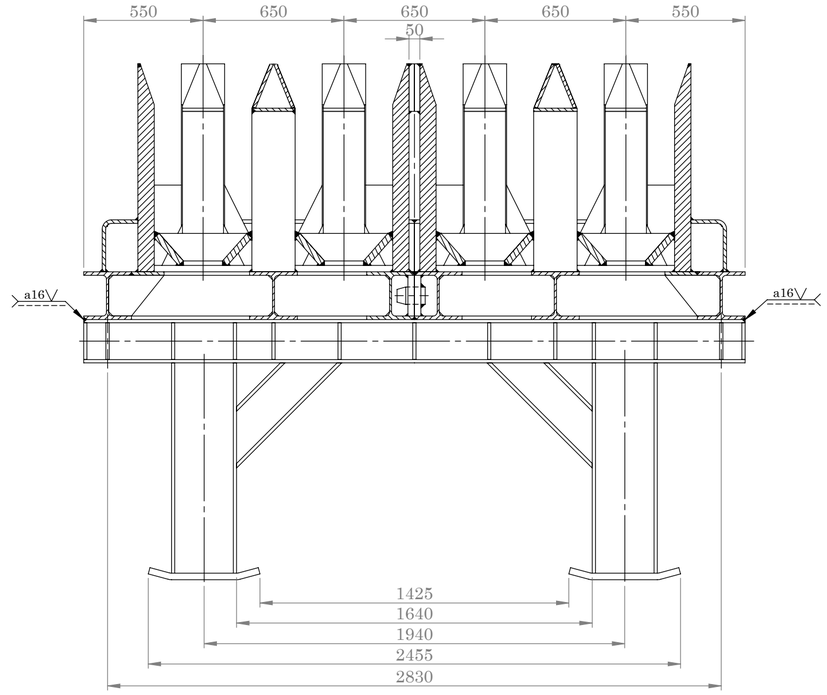

SECTION B-B
SCALE : 1:20 (↺ 90°)

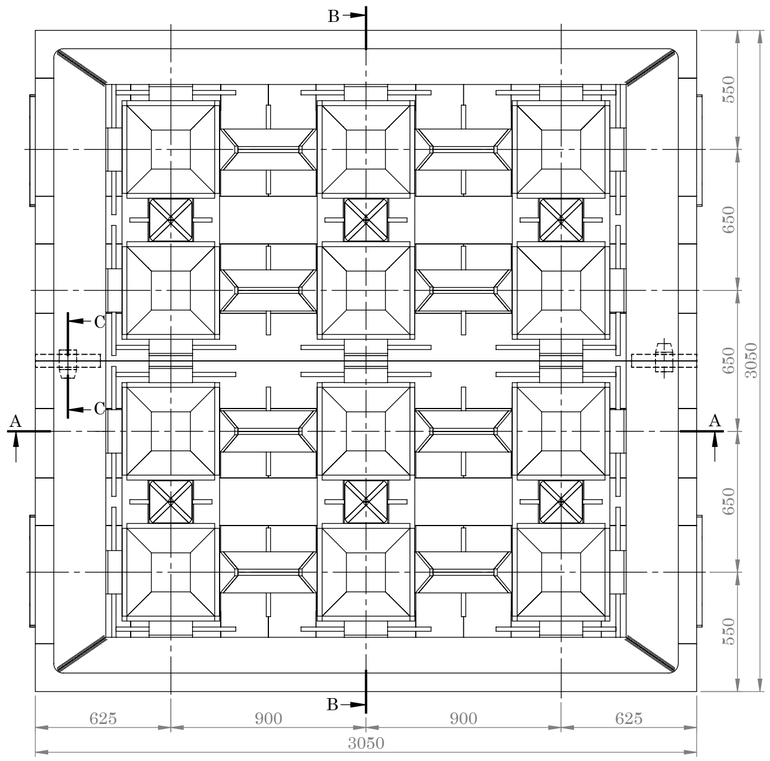

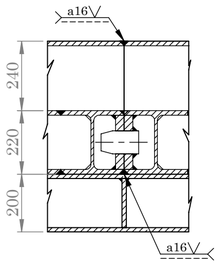

SECTION C-C
SCALE : 1:20 (↻ 90°)

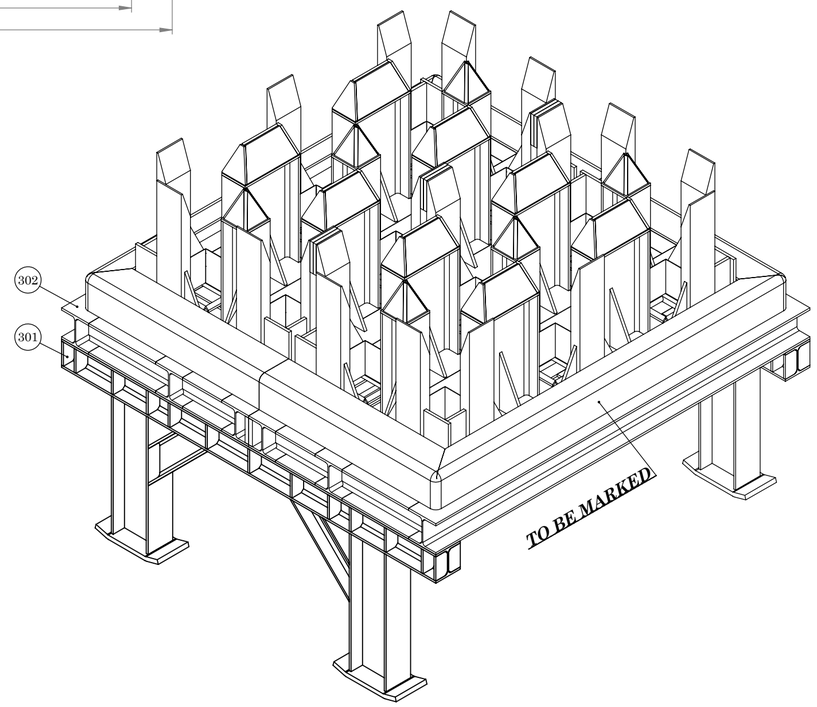

UNLESS OTHRWISE WELDING

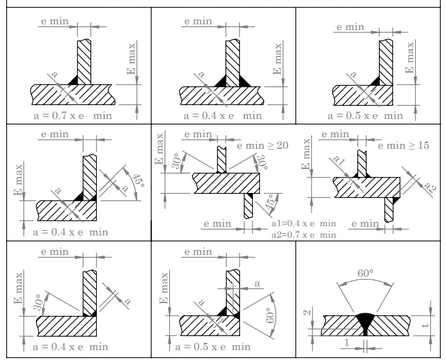

302	02	HALF PALLET	ST 44-2-CK 45	3885	7770	4.461088.S	8.070346.R
301	02	SUPPORT	ST 44-2	505	1010	4.461087.H	8.070346.R
001	01	ASSEMBLY	-	4390	8780	8.070346.R	-
POS	**QTY**	**DESCRIPTION**	**MATERIAL**	UNIT **MASS (kg)**	TOTAL	**DANIELI CODE**	**ASSY . CODE**

NOTE:
Dimension without tolerance follow:
ISO 2768-M

	NAME	DATE
DES.		
DRA.	M.H. Fesahat	91/10/12
CHK.	A.Alamdar	91/10/21
APPR.	M.Mirjalili	91/10/21

TITLE:
PLANT UNIT 03
INGOT CASTING BAY

IRAN ALLOY STEEL CO

ORDER.	RF1/92	REF.DRAW	***SD1103M6607001***		REV
CODE NO.	2011020013	DWG NO.	***FD1103M6607001***		01
QCTM NO.	BF50091	SCALE: **1 : 20**	SIZE: A2	SHEET: 1 OF 1	

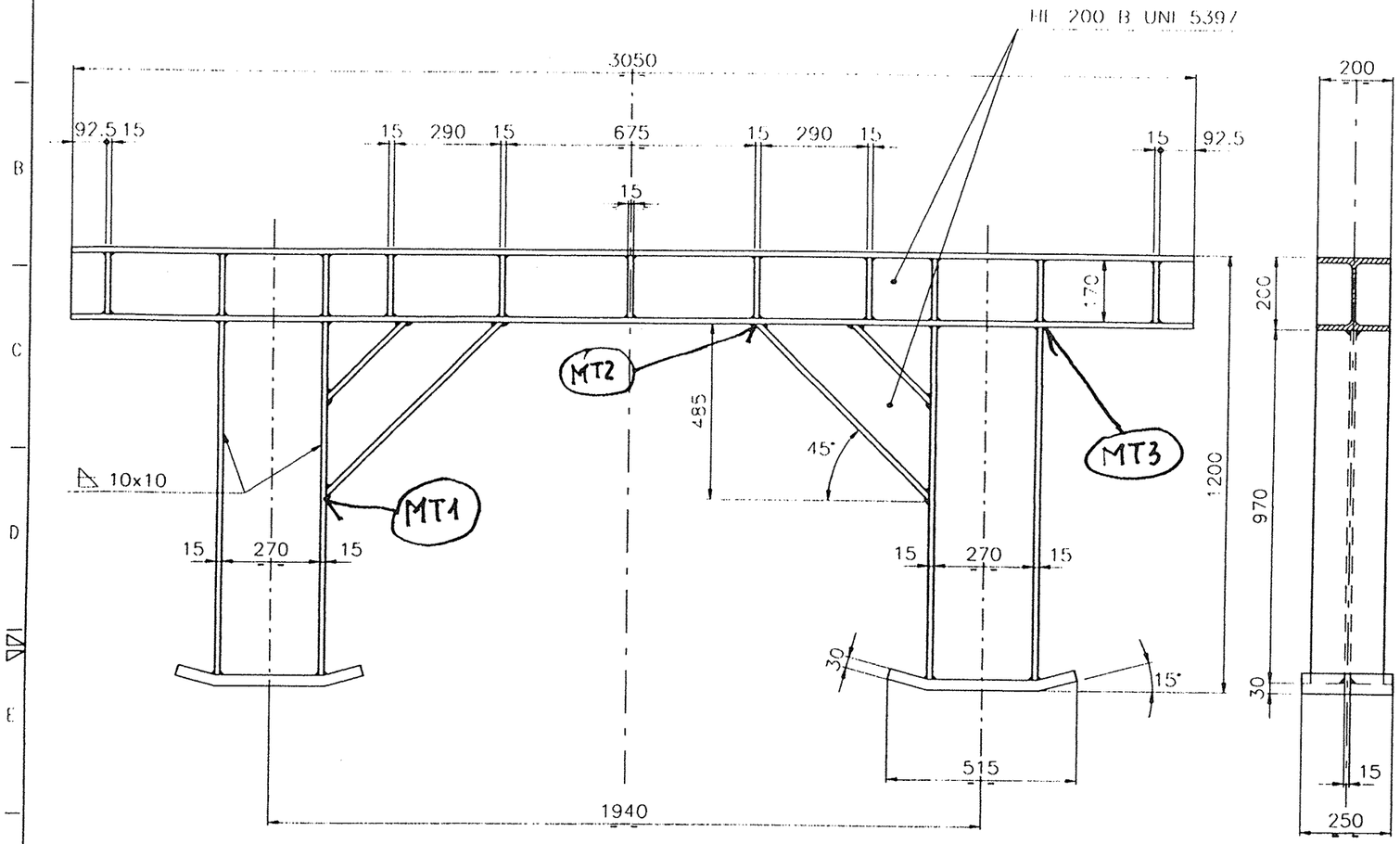

SCOSTAMENTI PER QUOTE SENZA INDICAZIONE DI TOLLERANZA TRA SUPERFICI GREZZE (mm)						
DEVIATIONS FOR DIMENSIONS WITHOUT TOLERANCE BETWEEN NO MACHINED SURFACES (mm)						
DA/FROM	0	121	316	1001	2001	OLTRE
A/TO	120	315	1000	2000	4000	OVER
——→	±1	±2	±3	±4	±5	±7

SALDATURE : DOVE NON ALTRIMENTI INDICATO A=0.7 DELLO SPESSORE MINIMO DA COLLEGARE.
WELDINGS: A=0.7 OF MIN. THICKNESS TO BE WELDED IF NOT OTHERWISE INDICATED.

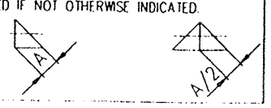

Fe 430 B UNI 7070-72
St 44.2 DIN 17100

REV.	FILE	DATE DATA	DESCRIPTION DESCRIZIONE	Drawn Disegnato	Checked Control.	Approved Approvato	Issue Varia
	C E						
	C E						
	C E						
1	C E	22.11.95	ISSUED FOR INFORMATION	SOM	MRI	ODF	BAA

REVISION -- REVISIONI

MINISTRY OF MINES AND METALS

NISCO

ALLOY STEEL PROJECT

YAZD - IRAN

APPROVED:

DVAI/BOHLER
CONSULTANT ENGINEER

APPROVED: A301d09/214

DANIELI CONSORTIUM MITSUBISHI CORPORATION

CODE - CODICE	CLASSIFICATION - CLASSIFICAZIONE	Obtained from - Ricav. da	Replace - Sostituisce
4461087H			

DRAWING - DISEGNO 0365-D21-M2786 Rev. 01

TITLE - TITOLO:
SUPPORT

SUPPORTO

Scale - Scala 1:10

Mass - Massa 490 Kg

Size - Form. A2

Sheet Foglio 1

Follow Segue

COMPUTER AIDED DESIGN

4461087H

DRAWING - DISEGNO SD111103M6607001301 01

COMPUTER AIDED DESIGN

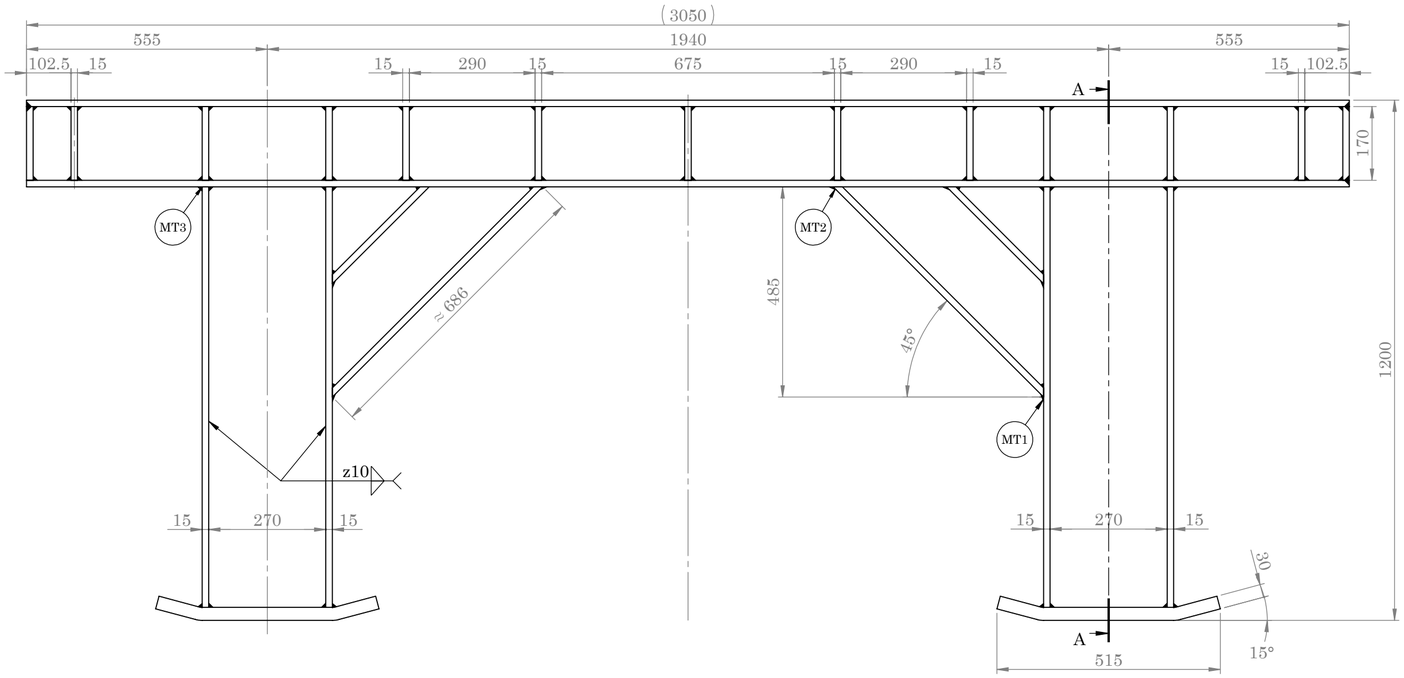

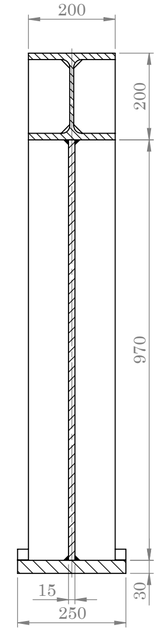

SECTION A-A
SCALE 1 : 10

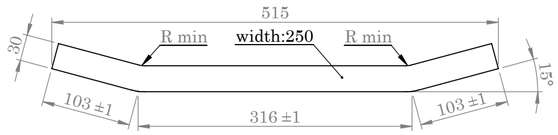

PIECE No.005
SCALE 1 : 5

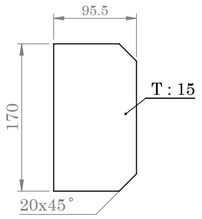

PIECE No.006
SCALE 1 : 5

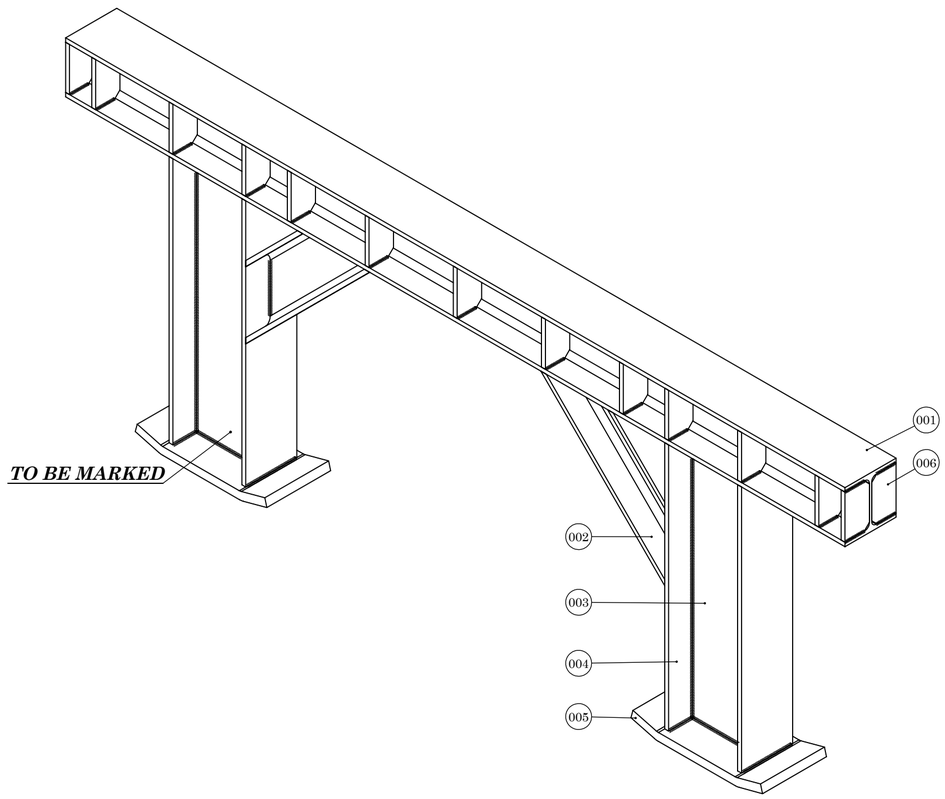

UNLESS OTHRWISE WELDING

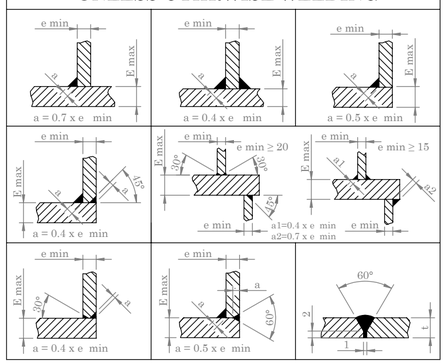

006	26	PL 170x95.5x15	ST 44-2	-	-	-	4.461087.H
005	02	PL 522x250x30	ST 44-2	-	-	-	4.461087.H
004	04	PL 970x200x15	ST 44-2	-	-	-	4.461087.H
003	02	PL 970x270x15	ST 44-2	-	-	-	4.461087.H
002	02	DIN 1025-IPB 200 , L:686	ST 44-2	-	-	0.311133.V	4.461087.H
001	01	DIN 1025-IPB 200 , L:3050	ST 44-2	-	-	0.311133.V	4.461087.H
301	02	ASSEMBLY	-	490	980	4.461087.H	8.070346.R
POS	**QTY**	**DESCRIPTION**	**MATERIAL**	UNIT **MASS (kg)**	TOTAL	**DANIELI CODE**	**ASSY . CODE**

NOTE:
Dimension without tolerance follow:
ISO 2768-M
MATERIAL:
ST44-2 DIN 17100

	NAME	DATE
DES.		
DRA.	M.H. Fesahat	91/10/12
CHK.	A.Alamdar	91/10/21
APPR.	M.Mirjalili	91/10/21

TITLE:
PLANT UNIT 03
SUPPORT

IRAN ALLOY STEEL CO

ORDER.	RF1/92.A1	REF.DRAW	***SD1103M6607001301*** REV
CODE NO.	4.461087.H	DWG NO.	***FD1103M6607001301*** 00
QCTM NO.	BF50091.1	SCALE: **1 : 10**	SIZE: A2 SHEET: 1 OF 1

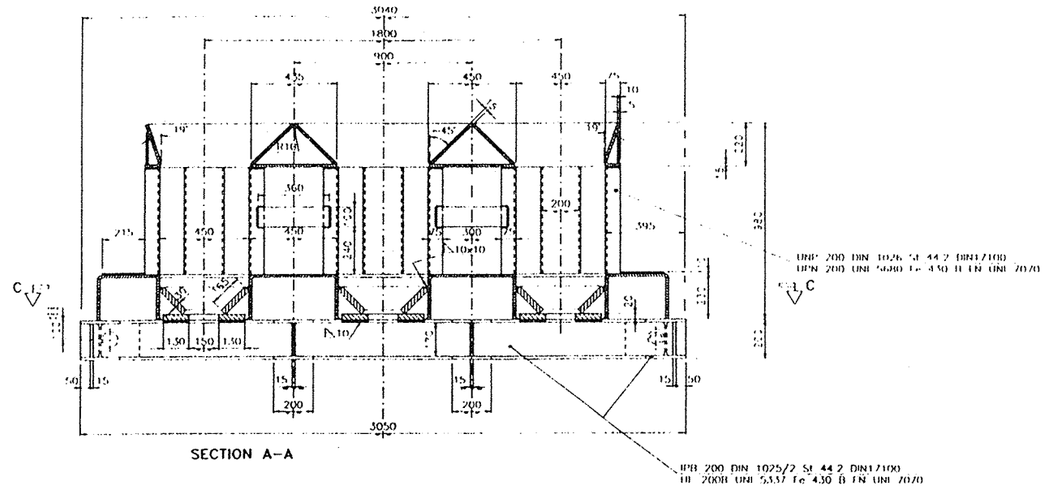

SECTION A–A

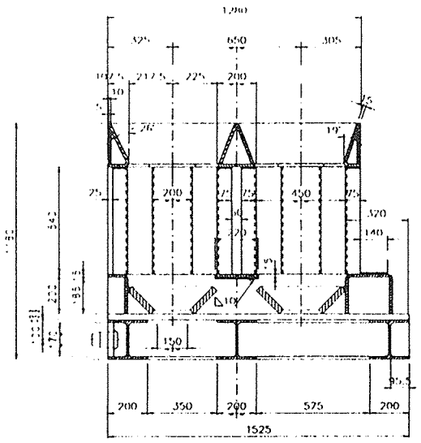

SECTION B–B

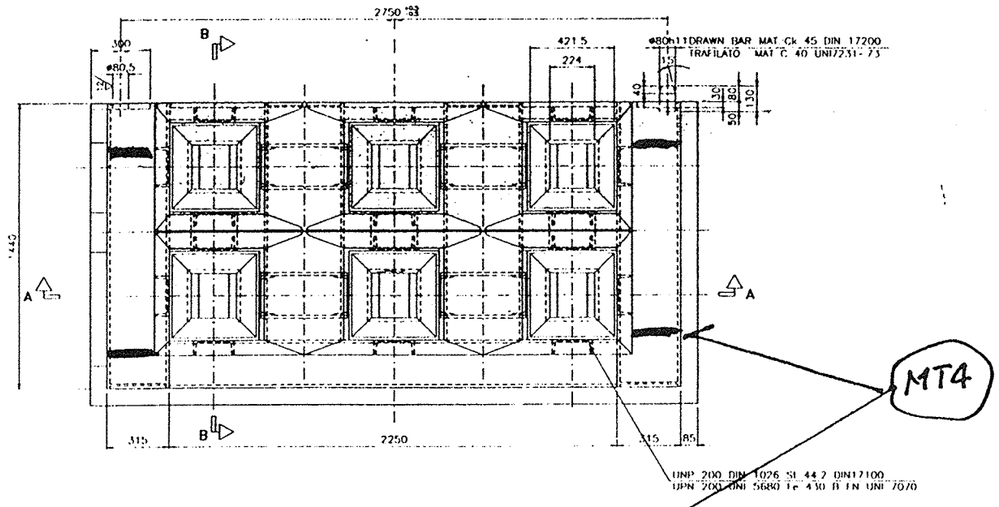

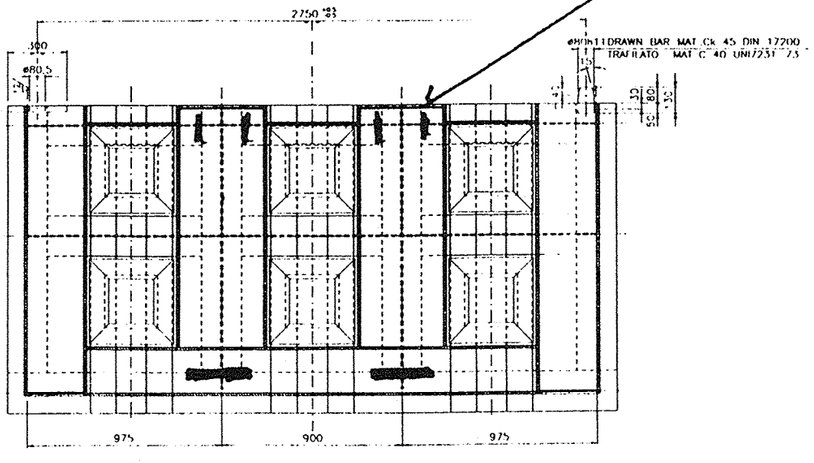

SECTION C–C

Fe 510 KW UNI EU 100/2
17 Mn4 DIN 17155

REV	FILE		DESCRIPTION / DESCRIZIONE
2		13.03.96	GENERAL REVISION
1		22.11.95	ISSUED FOR INFORMATION

REVISION - REVISIONS

MINISTRY OF MINES AND METALS

NIISCO

ALLOY STEEL PROJECT

VAZD - IRAN

APPROVED

DVAI/BOHLER CONSULTANT ENGINEER

APPROVED

A301 Ld09/215

DANIELI CONSORTIUM MITSUBISHI CORPORATION

DRAWING DESIGNED 0365-D21-M2785 02

TITLE TITOLO

HALF-PALLET

SEMI-PALLET

1:10

Size 3000 Kg

Size A0

Page 1

COMPUTER AIDED DESIGN

4461088S

DRAWING DISEGNO SD1103M6607001302

REVISIONS				
ZONE	REV.	DESCRIPTION	DATE	APPROVED
	01	POS 007 Changed from U Channel to Plate	12/09/1401	Fesahat

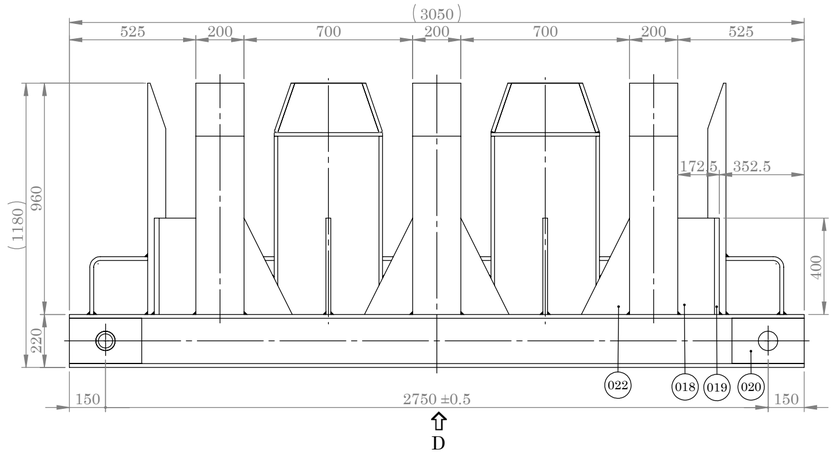

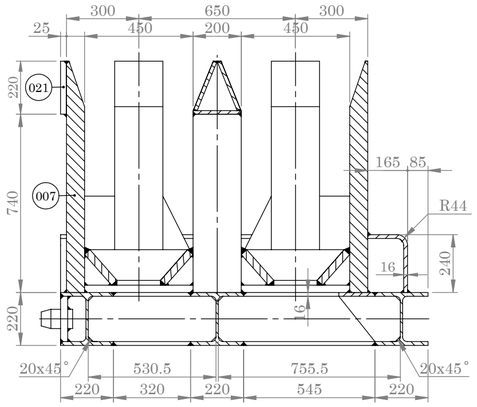

SECTION B-B
SCALE : 1:18 (P 90°)

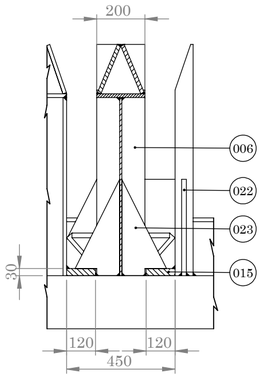

SECTION C-C
SCALE 1 : 18

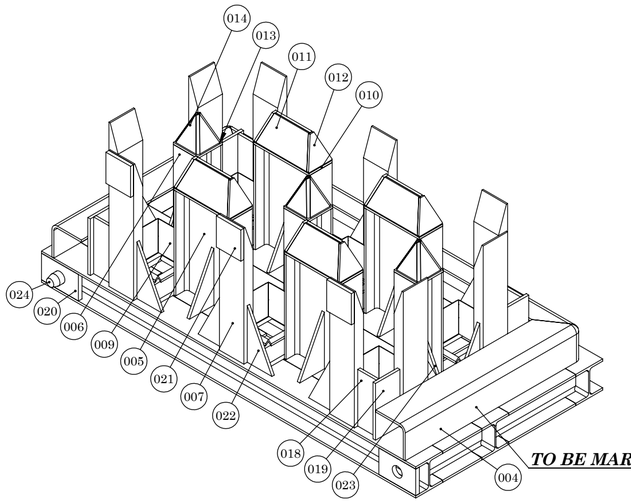

TO BE MARKED

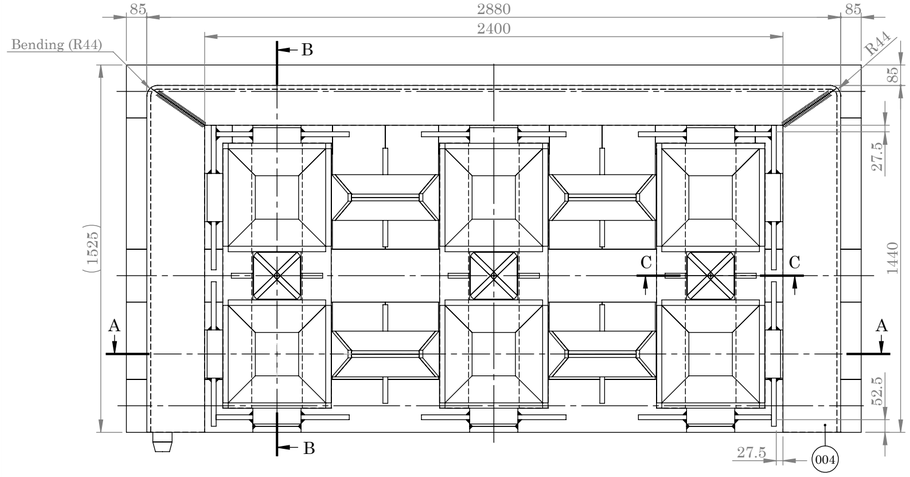

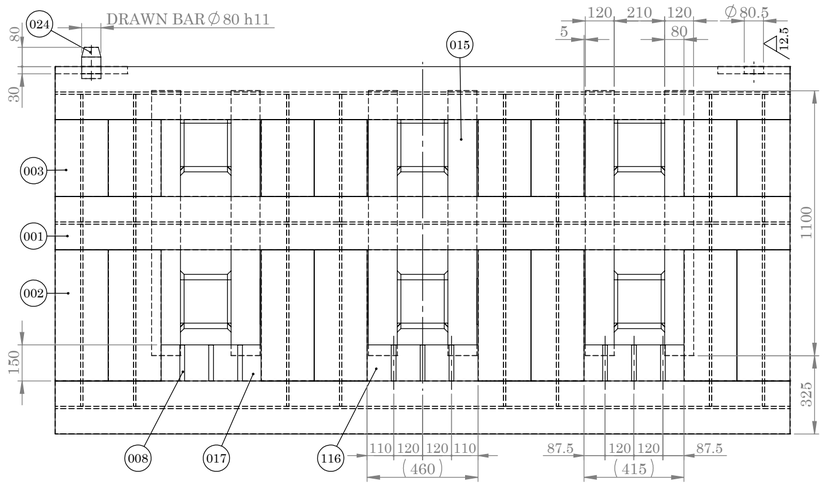

VIEW : D
SCALE : 1:18

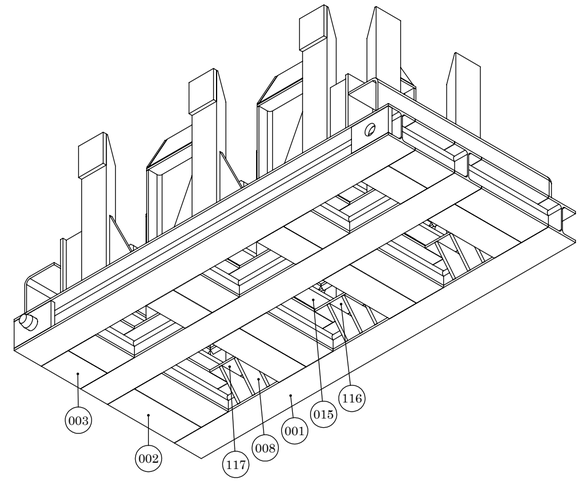

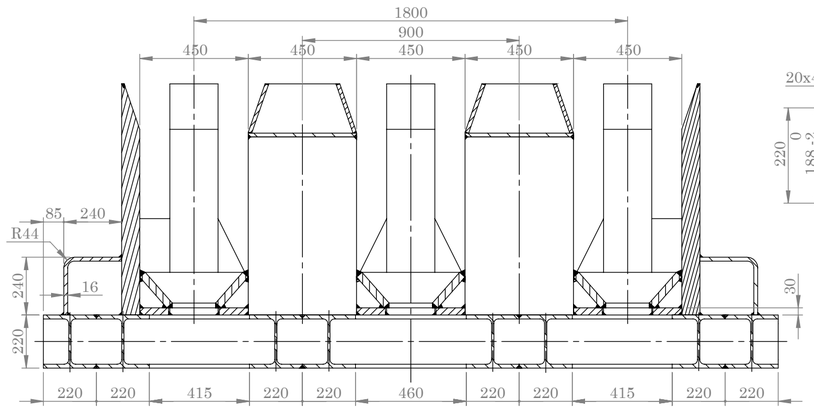

SECTION A-A
SCALE : 1:18 (↻180°)

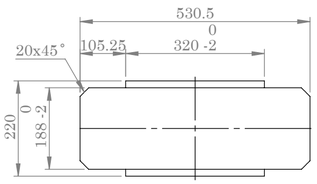

PIECE No.003
SCALE : 1:10

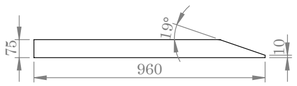

PIECE No.007

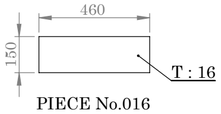

PIECE No.016

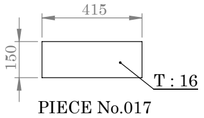

PIECE No.017

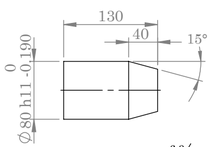

PIECE No.024 6.3
SCALE : 1:6

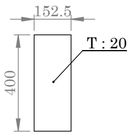

PIECE No.018

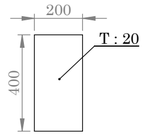

PIECE No.019

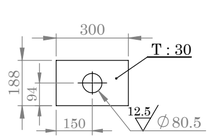

PIECE No.020 6.3 (12.5)

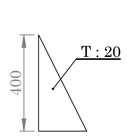

PIECE No.022

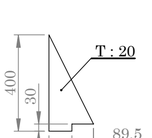

PIECE No.023

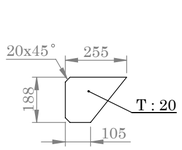

PIECE No.008

UNLESS OTHRWISE WELDING

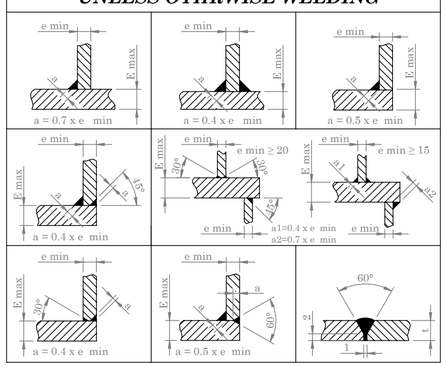

6.3 (12.5, 12.5)

POS	QTY	DESCRIPTION	MATERIAL	MASS (kg) UNIT	MASS (kg) TOTAL	DANIELI CODE	ASSY . CODE
024	01	ROD ∅80x130	CK 45	-	-	-	4.461088.S
023	06	PL 400x185x20	ST 44-2	-	-	-	4.461088.S
022	20	PL 400x200x20	ST 44-2	-	-	-	4.461088.S
021	03	PL 220x200x25	ST 44-2	-	-	-	4.461088.S
020	02	PL 300x188x30	ST 44-2	-	-	-	4.461088.S
019	04	PL 400x200x20	ST 44-2	-	-	-	4.461088.S
018	04	PL 400x152.5x20	ST 44-2	-	-	-	4.461088.S
017	02	PL 415x150x16	ST 44-2	-	-	-	4.461088.S
016	01	PL 460x150x16	ST 44-2	-	-	-	4.461088.S
015	06	PL 1100x120x30	ST 44-2	-	-	-	4.461088.S
014	12	PL 215x166x15	ST 44-2	-	-	-	4.461088.S
013	03	PL 200x200x15	ST 44-2	-	-	-	4.461088.S
012	08	PL 212x190x15	ST 44-2	-	-	-	4.461088.S
011	08	PL 420x215x15	ST 44-2	-	-	-	4.461088.S
010	04	PL 450x190x15	ST 44-2	-	-	-	4.461088.S
009	24	PL 405x170x30	ST 44-2	-	-	-	4.461088.S
008	09	PL 255x188x20	ST 44-2	-	-	-	4.461088.S
007	10	PL 960x200x75	ST 44-2	-	-	0.311228.K	4.461088.S
006	03	DIN 1025-IPE 200 , L:740	ST 44-2	-	-	0.311132.R	4.461088.S
005	04	DIN 1025-IPE 450 , L:740	ST 44-2	-	-	0.311210.M	4.461088.S
004	01	PL 5760x480x16	ST 44-2	-	-	-	4.461088.S
003	08	DIN 1025-IPB 220,L:530.5	ST 44-2	-	-	0.311133.V	4.461088.S
002	08	DIN 1025-IPB 220,L:755.5	ST 44-2	-	-	0.311133.V	4.461088.S
001	03	DIN 1025-IPB 220,L:3050	ST 44-2	-	-	0.311133.V	4.461088.S
302	02	ASSEMBLY	-	3885	7770	4.461088.S	8.070346.R

NOTE:
Dimension without tolerance follow:
ISO 2768-M
MATERIAL:
ST44-2 DIN 17100
CK 45 DIN 17200

	NAME	DATE
DES.		
DRA.	*M.H. Fesahat*	91/10/12
CHK.	*A.Alamdar*	91/10/21
APPR.	*M.Mirjalili*	91/10/21

TITLE:

PLANT UNIT 03
HALF PALLET

IRAN ALLOY STEEL CO

ORDER.	RF1/92.A2	REF.DRAW	***SD1103M6607001302*** REV
CODE NO.	4.461088.S	DWG NO.	***FD1103M6607001302*** 01
QCTM NO.	BF50091.2	SCALE: **1 : 18**	SIZE: A2 SHEET: 1 OF 4

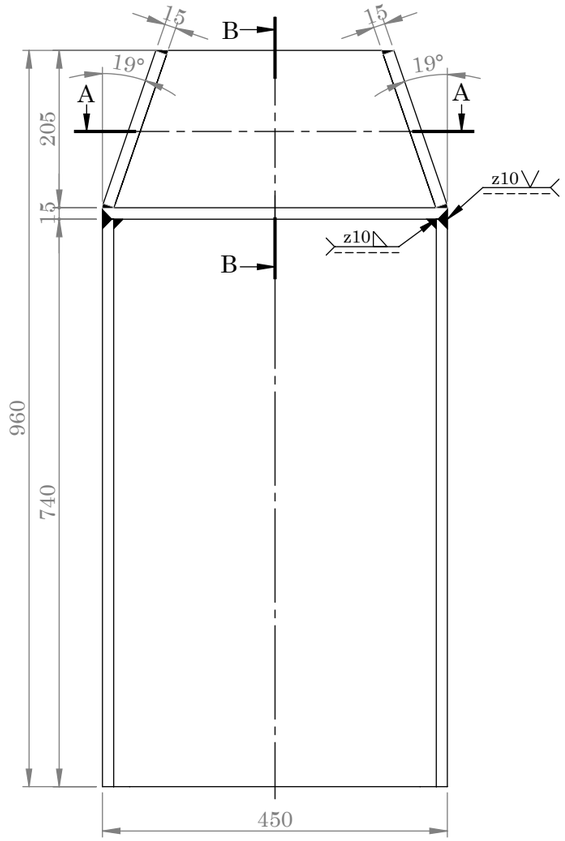

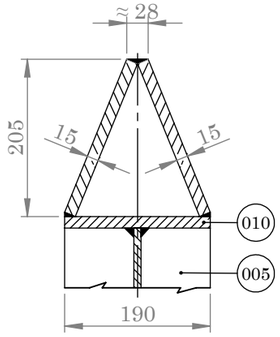

SECTION B-B
SCALE 1 : 8

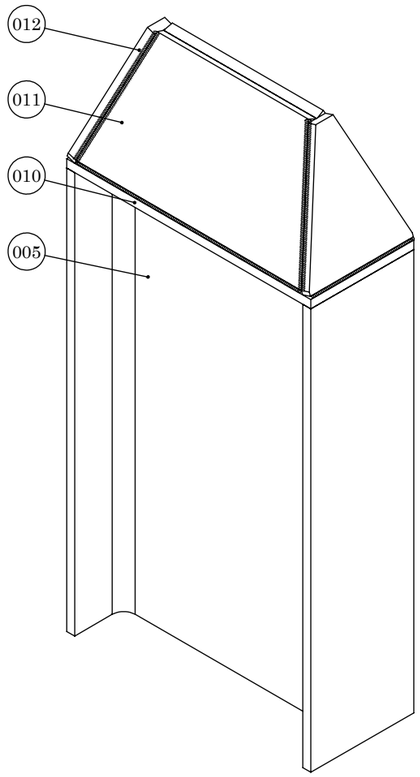

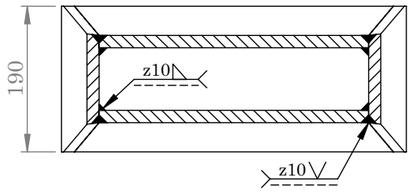

SECTION A-A
SCALE 1 : 8

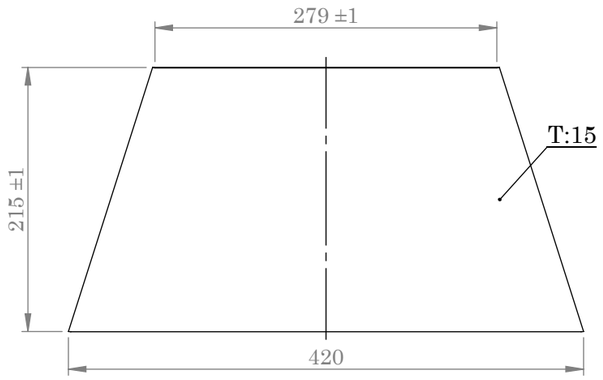

PIECE No.011
SCALE : 1 : 5

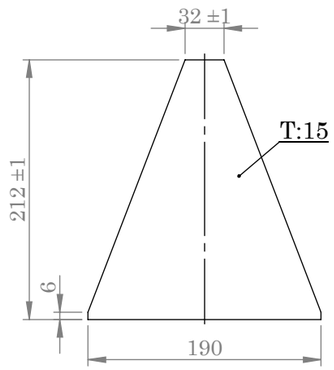

PIECE No.012
SCALE : 1 : 5

POS	QTY	DESCRIPTION	MATERIAL	UNIT MASS (kg)	TOTAL MASS (kg)	DANIELI CODE	ASSY . CODE
012	08	PL 212x190x15	ST 44-2	-	-	-	4.461088.S
011	08	PL 420x215x15	ST 44-2	-	-	-	4.461088.S
010	04	PL 450x190x15	ST 44-2	-	-	-	4.461088.S
005	04	DIN 1025-IPE 450 , L:740	ST 44-2	-	-	0.311210.M	4.461088.S

NOTE:
Dimension without tolerance follow: ISO 2768-M
Material: ST 44-2 DIN 17100

	NAME	DATE
DES.		
DRA.	M.H.Fesahat	91/10/12
CHK.	A.Alamdar	91/10/21
APPR.	M.Mirjalili	91/10/21

TITLE:
PLANT UNIT 03
PIECE No:
(005,010,011,012)

IRAN ALLOY STEEL CO

ORDER.	RF1/92.A2	REF.DRAW	***SD1103M6607001302*** REV
CODE NO.	-	DWG NO.	***FD1103M6607001302*** 01
QCTM NO.	BF50091.2	SCALE: 1 : 8	SIZE: A3 SHEET: 2 OF 4

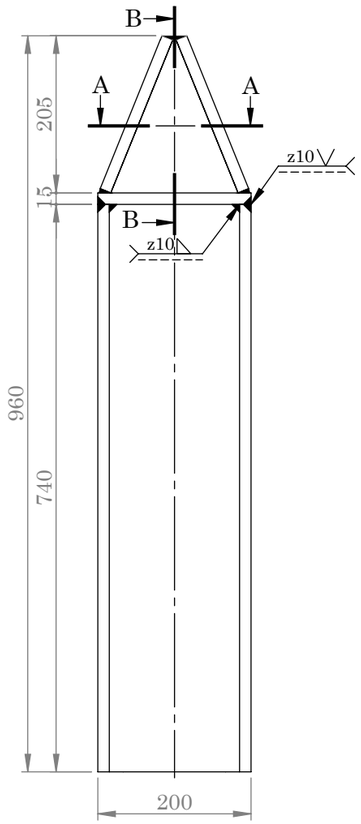

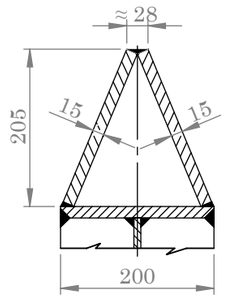

SECTION B-B
SCALE 1 : 8

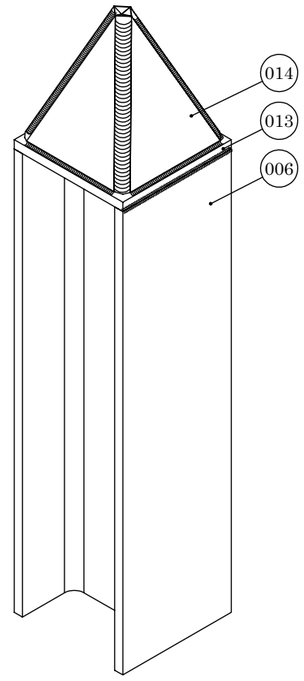

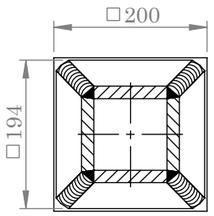

SECTION A-A
SCALE 1 : 8

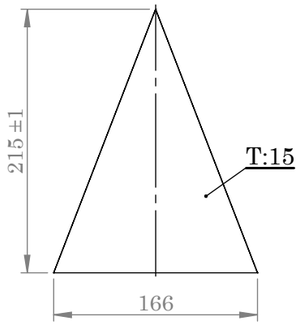

PIECE No.014
SCALE : 1 : 5

POS	QTY	DESCRIPTION	MATERIAL	MASS (kg) UNIT	MASS (kg) TOTAL	DANIELI CODE	ASSY . CODE
014	12	PL 215x166x15	ST 44-2	-	-	-	4.461088.S
013	03	PL 200x200x15	ST 44-2	-	-	-	4.461088.S
006	03	DIN 1025-IPE 200 , L:740	ST 44-2	-	-	0.311132.R	4.461088.S

NOTE:
Dimension without tolerance follow:
ISO 2768-M
Material:
ST 44-2 DIN 17100

	NAME	DATE
DES.		
DRA.	M.H.Fesahat	91/10/12
CHK.	A.Alamdar	91/10/21
APPR.	M.Mirjalili	91/10/21

TITLE:

PLANT UNIT 03
PIECE No:(006,013,014)

IRAN ALLOY STEEL CO

ORDER.	RF1/92.A2	REF.DRAW	***SD1103M6607001302*** REV
CODE NO.	-	DWG NO.	***FD1103M6607001302*** 01
QCTM NO.	BF50091.2	SCALE: 1 : 8	SIZE: A3 SHEET: 3 OF 4

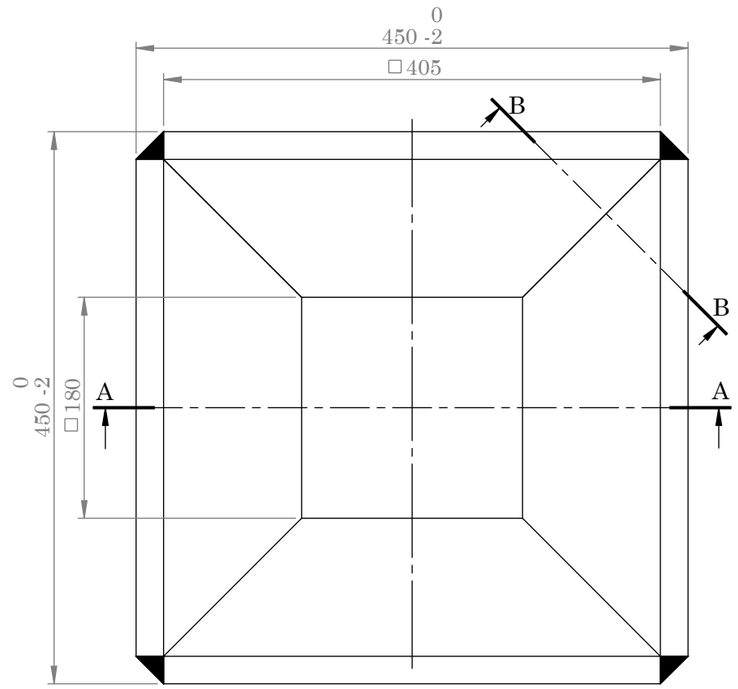

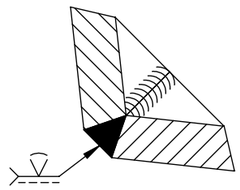

SECTION B-B
SCALE 1 : 5

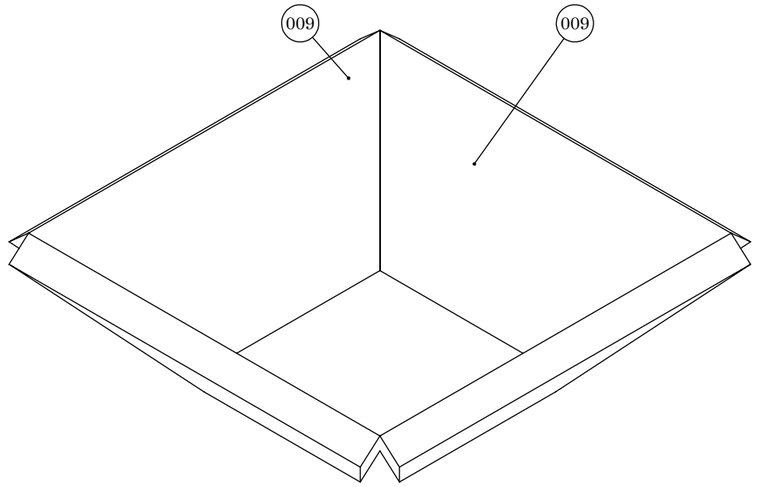

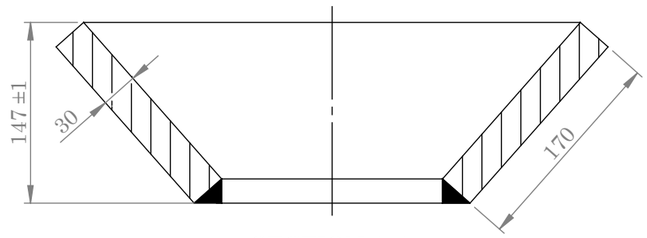

SECTION A-A
SCALE 1 : 5

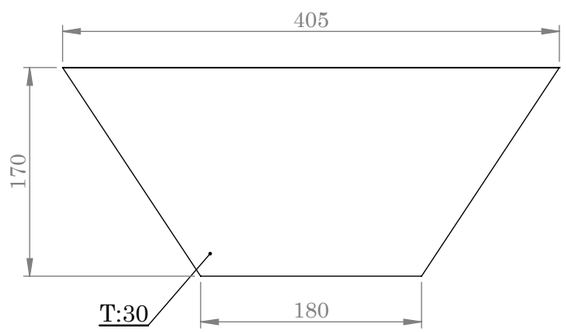

PIECE No.009
SCALE : 1 : 5

009	24	PL 405x170x30	ST 44-2	-	-	-	4.461088.S
POS	QTY	DESCRIPTION	MATERIAL	UNIT MASS (kg)	TOTAL MASS (kg)	DANIELI CODE	ASSY . CODE

NOTE:
Dimension without tolerance follow:
ISO 2768-M
Material:
ST 44-2 DIN 17100

	NAME	DATE
DES.		
DRA.	M.H.Fesahat	91/10/12
CHK.	A.Alamdar	91/10/21
APPR.	M.Mirjalili	91/10/21

TITLE:
PLANT UNIT 03
PIECE No.009

IRAN ALLOY STEEL CO

ORDER.	RF1/92.A2	REF.DRAW	***SD1103M6607001302*** REV
CODE NO.	-	DWG NO.	***FD1103M6607001302*** 01
QCTM NO.	BF50091.2	SCALE: 1 : 5	SIZE: A3 SHEET: 4 OF 4

TRAVI IPE AD ALI STRETTE PARALLELE DIN 1025/5
MEDIUM PARALLEL FLANGES IPE BEAMS DIN 1025/5

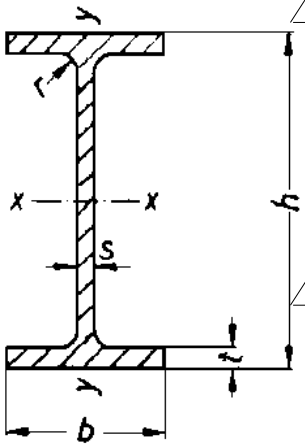

02 Norma di riferimento: DIN 1025-5
Materiale: S275JR EN 10025
Tolleranze dimensionali: secondo EN 10034
Condizioni di fornitura: EN 10163/1-3

Reference Standard: DIN 1025-5
Material: S275JR EN 10025
Dimensional tolerances: according to EN 10034
Supply conditions: EN 10163/1-3

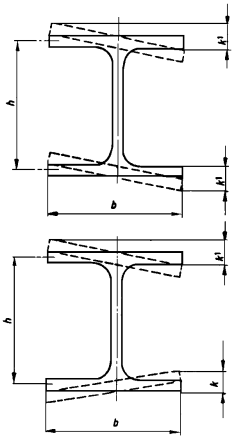

02 - Perpendicolarità: per b≤110; $k+k_1$ = 1,5 mm
per b≥120; $k+k_1$ = 2% di b

- Out of squareness: for b≤110; $k+k_1$ = 1,5 mm
for b≥120; $k+k_1$ = 2% of b

02 - Simmetria:
per b≤110 e = 2,5 mm
per b≥120 e = 3,5 mm

- Web off-centre:
for b≤110 e = 2,5 mm
for b≥120 e = 3,5 mm

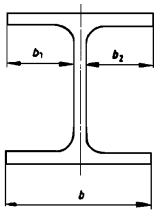

$e = (b_1-b_2)/2$

Es. di design.:
0.311202.H IPE 200 DIN 1025/5
02 S275JR EN 10025
Toll. EN 10034

Ex. of design.:
0.311202.H IPE 200 DIN 1025/5
02 *S275JR EN 10025*
Tol. EN 10034

02 - Rettilineità longitudinale e trasversale q:
per h≤180 q = 0,0030 L
per h≥200 e ≤360 q = 0,0015 L
per h≥400 = 0,0010 L

- Longitudinal and trasversal straightness q:
for h≤180 q = 0,0030 L
for h≥200 and ≤360 q = 0,0015 L
for h≥400 = 0,0010 L

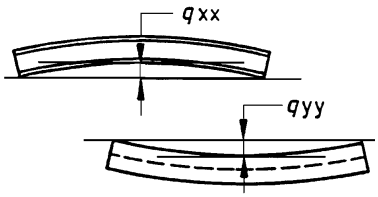

Dimensioni in mm
Dimensions in mm

Design. IPE	h	Toll. h	b	Toll. b	s	Toll. s	t	Toll. t	r_1	Sez. cm^2	Jx cm^4	Wx cm^3	Jy cm^4	Wy cm^3	Mass kg/m	CODICE *CODE*
IPE 80	80		46		3,8		5,2	+1,5	5	7,64	80,1	20	8,49	3,69	6	0.311196.V
IPE 100	100		55		4,1		5,7	-0,5	7	10,3	171	34,2	15,9	5,79	8,1	0.311197.W
IPE 120	120	+3,0	64		4,4		6,3		7	13,2	318	53	27,7	8,65	10,4	0.311198.E
IPE 140	140	-2,0	73	+4,0	4,7		6,9		7	16,4	541	77,3	44,9	12,3	12,9	0.311199.F
IPE 160	160		82	-1,0	5,0	±0,70	7,4		9	20,1	869	109	68,3	16,7	15,8	0.311200.R
IPE 180	180		91		5,3		8	+2,0	9	23,9	1320	146	101	22,2	18,8	0.311201.Q
IPE 200	200		100		5,6		8,5	-1,0	12	28,5	1940	194	142	28,5	22,4	0.311202.H
IPE 220	220		110		5,9		9,2		12	33,4	2770	252	205	37,3	26,2	0.311203.K
IPE 240	240		120		6,2		9,8		15	39,1	3890	324	284	47,3	30,7	0.311204.L
IPE 270	270	+3,0	135		6,6		10,2		15	45,9	5790	429	420	62,2	36,1	0.311205.M
IPE 300	300	-2,0	150		7,1		10,7		15	53,8	8360	557	604	80,5	42,2	0.311206.N
IPE 330	330		160	+4,0	7,5		11,5		18	62,6	11770	713	788	98,5	49,1	0.311207.P
IPE 360	360		170	-1,0	8,0	±1,0	12,7	+2,5	18	72,7	16270	904	1040	123	57,1	0.311208.X
IPE 400	400		180		8,6		13,5	-1,5	21	84,5	23130	1160	1320	146	66,3	0.311209.Z
IPE 450	450		190		9,4		14,6		21	98,8	33740	1500	1680	176	77,6	0.311210.M
IPE 500	500	+5,0	200		10,2		16,0		21	116	48200	1930	2140	214	90,7	0.311211.A
IPE 550	550	-3,0	210		11,1	±1,5	17,2		24	134	67120	2440	2670	254	106	0.311212.B
IPE 600	600		220	±4,0	12,0		19,0		24	156	92080	3070	3390	308	122	0.311213.C

According to law Danieli&C. considers this document to be a company secret and therefore prohibits any person to reproduce it or make it known in whole or in part to other parties or to competitors without specific written authorization of Danieli's Management

TRAVI IPB AD ALI LARGHE PARALLELE DIN 1025/2 (Corrisp. HE..B - EU 34-53)
WIDE FLANGES IPB BEAMS WITH PARALLEL FLANGES DIN 1025/2 (Agreed HE..B - EU 34-53)

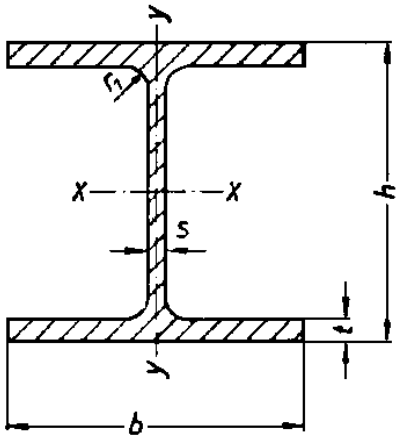

Materiale: St 44.2 DIN 17100

Material: St 44.2 DIN 17100

Toll. di rettilineità long.: IPB 100 ÷ IPB 400 = 0,0015 L
IPB 450 ÷ IPB 1000 = 0,0010 L

Long. straightness: IPB 100 ÷ IPB 400 = 0,0015 L
IPB 450 ÷ IPB 1000 = 0,0010 L

Toll. di rettilineità trasv. f: ≤ IPB 450 = 1,5 mm
IPB 500÷ IPB 700 = 2 mm
IPB 800÷ IPB 1000 = 3 mm

Web bow f : ≤ IPB 450 = 1,5 mm
IPB 500÷ IPB 700 = 2 mm
IPB 800÷ IPB 1000 = 3 mm

Toll. di perpendicolarità k: ≤ IPB 240 = 1% di b
≥ IPB 260 = 1,2% di b

Out of squareness k: ≤ IPB 240 = 1% of b
≥ IPB 260 = 1,2% of b

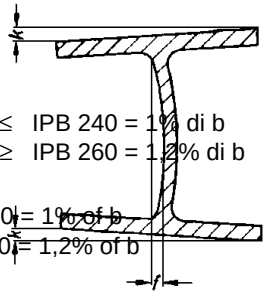

Es. di design.:
0.311132.R IPB 200 DIN 1025/2
St 44.2 DIN 17100

Ex. of design.:
0.311132.R IPB 200 DIN 1025/2
St 44.2 DIN 17100

Design. IPB	h	Toll. h	b	Toll. b	s	Toll. s	t	Toll. t	r_1	Sez. cm^2	Jx cm^4	Wx cm^3	Jy cm^4	Wy cm^3	Massa Kg/m	CODICE CODE
IPB 100	100		100		6		10			26	450	89,9	167	33,5	20,4	0.311127.X
IPB 120	120	+ 4	120		6,5		11		12	34	864	144	318	52,9	26,7	0.311128.F
IPB 140	140	- 2	140		7		12			43	1510	216	550	78,5	33,7	0.311129.G
IPB 160	160		160		8		13	± 1,5	15	54,3	2490	311	889	111	42,6	0.311130.E
IPB 180	180		180		8,5	± 1	14			65,3	3830	426	1360	151	51,2	0.311131.T
IPB 200	200		200		9		15		18	78,1	5700	570	2000	200	61,3	0.311132.R
IPB 220	220		220		9,5		16			91	8090	736	2840	258	71,5	0.311133.V
IPB 240	240		240		10		17		21	106	11260	938	3920	327	83,2	0.311134.W
IPB 260	260		260		10		17,5		24	118	14920	1150	5130	395	93	0.311135.X
IPB 280	280	± 3	280		10,5		18			131	19270	1380	6595	471	103	0.311136.Z
IPB 300	300		300	± 3	11		19			149	25170	1680	8560	571	117	0.311137.S
IPB 320	320		300		11,5		20,5			161	30820	1930	9240	616	127	0.311138.A
IPB 340	340		300		12		21,5			171	36660	2160	9690	646	134	0.311139.B
IPB 360	360		300		12,5		22,5			181	43190	2400	10140	676	142	0.311140.P
IPB 400	400		300		13,5	± 1,5	24	± 2	27	198	57680	2880	10820	721	155	0.311141.C
IPB 450	450	± 4	300		14		26			218	79890	3550	11720	781	171	0.311142.D
IPB 500	500		300		14,5		28			239	107200	4290	12620	842	187	0.311143.E
IPB 550	550		300		15		29			254	136700	4970	13080	872	199	0.311144.F
IPB 600	600		300		15,5		30			270	171000	5700	13530	902	212	0.311145.G
IPB 700	700	± 5	300		17		32			306	256900	7340	14440	963	241	0.311146.A
IPB 800	800		300		17,5		33			334	359100	8980	14900	994	262	0.311147.B
IPB 900	900		300		18,5	± 2	35		30	371	494100	10980	15820	1050	291	0.311148.K
IPB 1000	1000		300		19		36			400	644700	12890	16280	1090	314	0.311149.L

A termini di legge la **DANIELI & C. S.p.A.** considera questo documento come segreto aziendale con **divieto per chiunque** di riprodurlo e/o di renderlo comunque noto, in tutto o in parte, a terzi, ovvero a ditte concorrenti, senza specifica autorizzazione scritta della **Direzione DANIELI.**

According to law Danieli&C. considers this document to be a company secret and therefore prohibits any person to reproduce it or make it known in whole or in part to other parties or to competitors without specific written authorization of Danieli's Management

TRAVI AD U A SPIGOLI ARROTONDATI DIN 1026
ROUND EDGE CHANNELS DIN 1026

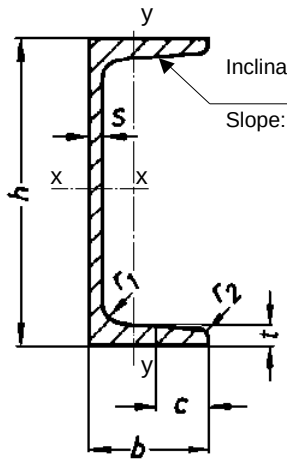

Inclinazione: h ≤ 300 mm: 8%
> 300 mm: 5%

Slope: h ≤ 300 mm: 8%
> 300 mm: 5%

Materiale: St 44.2 DIN 17100

Material: St 44.2 DIN 17100

Toll. di rettilineità long.: q = 0,0015 L

Long. straightness: q = 0,0015 L

Toll. di rettilineità trasv. f: b ≤ 100 = 0,5 mm
b > 100 ÷ ≤ 200 = 1 mm
b > 200 ÷ ≤ 400 = 1,5 m

c = b/2 for h ≤ 300 mm
c = (b - s)/2 for h > 300 mm

Web bow f : ≤ b ≤ 100 = 0,5 mm
b > 100 ÷ ≤ 200 = 1 mm
b > 200 ÷ ≤ 400 = 1,5 mm

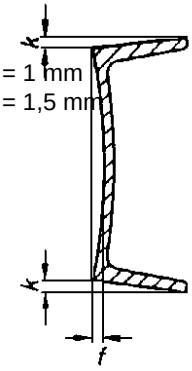

Es. di design.:
0.311228.K U 200 DIN 1026
St 44.2 DIN 17100

Toll. di perpendicolarità k: b
b > 100 = 1% b

Ex. of design.:
0.311228.K U 200 DIN 1026
St 44.2 DIN 17100

Out of squareness k: b ≤ 100 =
b > 100 = 1% b

Design. U	h	Toll. h	b	Toll. b	s	Toll. s	t	Toll. t	r_1	r_2	Sez. cm^2	Jx cm^4	Wx cm^3	Jy cm^4	Wy cm^3	Massa Kg/m	CODICE CODE
U 30x15	30		15		4		4,5		4,5	2	2,21	2,53	1,69	0,38	0,39	1,74	0.311214.D
U 30	30		33		5		7		7	3,5	5,44	6,39	4,26	5,33	2,68	4,27	0.311215.E
U 40x20	40		20		5		5,5		5	2,5	3,66	7,58	3,79	1,14	0,86	2,87	0.311216.F
U 40	40	± 1,5	35		5		7		7	3,5	6,21	14,1	7,05	6,68	3,08	4,87	0.311217.G
U 50x25	50		25		5		6		6	3	4,92	16,8	6,73	2,49	1,48	3,86	0.311218.Q
U 50	50		38		5		7	- 0,5	7	3,5	7,12	26,4	10,6	9,12	3,75	5,59	0.311219.H
U 60	60		30		6		6		6	3	6,46	31,6	10,5	4,51	2,16	5,07	0.311220.P
U 65	65		42	± 1,5	5,5		7,5		7,5	4	9,03	57,5	17,7	14,1	5,07	7,09	0.311221.C
U 80	80		45		6		8		8	4	11	106	26,5	19,4	6,36	8,64	0.311222.D
U 100	100		50		6	± 0,5	8,5		8,5	4,5	13,5	206	41,2	29,3	8,49	10,6	0.311223.E
U 120	120		55		7		9		9	4,5	17	364	60,7	43,2	11,1	13,4	0.311224.F
U 140	140	± 2	60		7		10		10	5	20,4	605	86,4	62,7	14,8	16	0.311225.G
U 160	160		65		7,5		10,5		11	5,5	24	925	116	85,3	18,3	18,8	0.311226.A
U 180	180		70		8		11		11	5,5	28	1350	150	114	22,4	22	0.311227.B
U 200	200		75		8,5		11,5		12	6	32,2	1910	191	148	27	25,3	0.311228.K
U 220	220		80		9		12,5	- 1	13	6,5	37,4	2690	245	197	33,6	29,4	0.311229.L
U 240	240		85		9,5		13		13	6,5	42,3	3600	300	248	39,6	33,2	0.311230.H
U 260	260		90	± 2	10		14		14	7	48,3	4820	371	317	47,7	37,9	0.311231.E
U 280	280	± 3	95		10		15		15	7,5	53,3	6280	448	399	57,2	41,8	0.311232.F
U 300	300		100		10		16		16	8	58,8	8030	535	495	67,8	46,2	0.311233.G
U 320	320		100		14		17,5		18	8,7	75,8	10870	679	597	80,6	59,5	0.311234.A
U 350	350		100	± 2,5	14	± 0,7	16	- 1,5	16	8	77,3	12840	734	570	75	60,6	0.311235.B
U 400	400		110		14		18		18	9	91,5	20350	1020	846	102	71,8	0.311236.C

A termini di legge la **DANIELI & C. S.p.A.** considera questo documento come segreto aziendale con **divieto per chiunque** di riprodurlo e/o di renderlo comunque noto, in tutto o in parte, a terzi, ovvero a ditte concorrenti, senza specifica autorizzazione scritta della **Direzione DANIELI.**